Government Polytechnic College, Jodhpur
Department of Computer Science (NBA Accredited)

Programme: Diploma **Class Test**: II **Term**: 2017-18
Course: Operating System Principles **Year**: IInd
Course CODE: CS-203 **Time:**12:15 to 1:15
Max.Marks :15 **Date:** 23-01-2018
Instructions to candidates: Attempt Any Three Questions
1.Mobiles,smart watches or any electronic gadgets are strictly banned.

SI#	Question	Marks	CO MAPPING
1	Define deadlock? Explain Necessary Conditions for deadlock.	5	CO3
2	What is Deadlock recovery? Explain the method for Deadlock recovery	5	CO3
3	Explain Contiguous memory allocation method.	5	CO4
4.	Explain the Concept of Paging and it method.	5	CO4

1. DEFINE DEADLOCK? EXPLAIN NECESSARY CONDITIONS FOR DEADLOCK.

A set of processes is in a deadlock state when every process in the set is waiting for an event that can be caused only by another process in the set. The events with which we are mainly concerned here are resource acquisition and release. The resources maybe either physical resources (for example, printers, tape drives, memory space, and CPU cycles) or logical resources (for example, files, semaphores, and monitors)

NECESSARY CONDITIONS FOR DEADLOCK

A deadlock situation can arise if the following four conditions hold simultaneously in a system:

1. Mutual exclusion. At least one resource must be held in a non sharable mode; that is, only one process at a time can use the resource. If another process requests that resource, the requesting process must be delayed until the resource has been released.

2. Hold and wait. A process must be holding at least one resource and waiting to acquire additional resources that are currently being held by other processes.

3. No preemption. Resources cannot be preempted; that is, a resource can be released only voluntarily by the process holding it, after that process has completed its task.

4. Circular wait. A set { P_0, P_1 , P_2 ,..... , P_i ,....., P_n } of waiting processes must exist such that P_0 is waiting for a resource held by P_1, P_1 is waiting for a resource held by P_2, ... , P_{n-1} is waiting for a resource held by P_n, and P_n is waiting for a resource held by P_0.

2. WHAT IS DEADLOCK RECOVERY? EXPLAIN THE METHOD FOR DEADLOCK RECOVERY.

When a detection algorithm determines that a deadlock exists, several alternatives are available. One possibility is to inform the operator that a deadlock has occurred and to let the operator deal with the deadlock manually. Another possibility is to let the system *recover* from the deadlock automatically. There are two options for breaking a deadlock.

- One is simply to abort one or more processes to break the circular wait.
- The other is to preempt some resources from one or more of the deadlocked processes.

2.1 Process Termination

To eliminate deadlocks by aborting a process, we use one of two methods. In both methods, the system reclaims all resources allocated to the terminated processes.

1. Abort all deadlocked processes. This method clearly will break the deadlock cycle, but at great expense; the deadlocked processes may have computed for a long time, and the results of these partial computations must be discarded and probably will have to be recomputed later.

2. Abort one process at a time until the deadlock cycle is eliminated. This method incurs considerable overhead, since after each process is aborted, a deadlock-detection algorithm must be invoked to determine whether any processes are still deadlocked.

Aborting a process may not be easy. If the process was in the midst of updating a file, terminating it will leave that file in an incorrect state. Similarly, if the process was in the midst of printing data on a printer, the system must reset the printer to a correct state before printing the next job.

Many factors may affect which process is chosen, including:

1. What the priority of the process is
2. How long the process has computed and how much longer the process will compute before completing its designated task
3. How many and what types of resources the process has used (for example, whether the resources are simple to preempt)
4. How many more resources the process needs in order to complete
5. How many processes will need to be terminated
6. Whether the process is interactive or batch

2.2 Resource Preemption

To eliminate deadlocks using resource preemption, we successively preempt some resources from processes and give these resources to other processes until the deadlock cycle is broken. If preemption is required to deal with deadlocks, then three issues need to be addressed:

1. Selecting a victim. Which resources and which processes are to be preempted? As in process termination, we must determine the order of preemption to minimize cost. Cost factors may include such parameters as the number of resources a deadlocked process is holding and the amount of time the process has thus far consumed during its execution.

2. Rollback. If we preempt a resource from a process, what should be done with that process? Clearly, it cannot continue with its normal execution; it is missing some needed resource. We must roll back the process to some safe state and restart it from that state. Since, in general, it is difficult to determine what a safe state is, the simplest solution is a total rollback: abort the process and then restart it. Although it is more effective to roll back the process only as far as necessary to break the deadlock, this method requires the system to keep more information about the state of all running processes.

3. EXPLAIN CONTIGUOUS MEMORY ALLOCATION METHOD.

In contiguous memory allocation, each process is contained in a single contiguous section of memory. The simplest methods for allocating memory is to divide memory into several fixed-sized partitions. Each partition may contain exactly one process. In the fixed-partition scheme, the operating system keeps a table indicating which parts of memory are available and which are occupied. Initially, all memory is available for user processes and is considered one large block of available memory, a hole. When a process arrives and needs memory, we search for a hole large enough for this process. If we find one, we allocate only as much memory as is needed, keeping the rest available to satisfy future requests. As processes enter the system, they are put into an input queue. The operating system takes into account the memory requirements of each process and the amount of available memory space in determining which processes are allocated memory. When a process is allocated space, it is loaded into memory, and it can then compete for the CPU. When a process terminates, it releases its memory, which the operating system may then fill with another process from the input queue. At any given time, we have a list of available block sizes and the input queue. The operating system can order the input queue according to a scheduling algorithm. Memory is allocated to processes until, finally, the memory requirements of the next process cannot be satisfied—that is, no available block of memory (or hole) is large enough to hold that process. The operating system can then wait until a large enough block is available, or it can skip down the input queue to see whether the smaller memory requirements of some other process can be met. This procedure is a particular instance of the general dynamic storage allocation problem, which concerns how to satisfy a request of size n from a list of free

holes. There are many solutions to this problem. The first-fit, best-fit, and worst-fit strategies are the ones most commonly used to select a free hole from the set of available holes.

1. First fit. Allocate the first hole that is big enough. Searching can start either at the beginning of the set of holes or where the previous first-fit search ended. We can stop searching as soon as we find a free hole that is large enough.
2. Best fit. Allocate the smallest hole that is big enough. We must search the entire list, unless the list is ordered by size. This strategy produces the smallest leftover hole.
3. Worst fit. Allocate the largest hole. Again, we must search the entire list, unless it is sorted by size. This strategy produces the largest leftover hole, which may be more useful than the smaller leftover hole from a best-fit approach.

Neither first fit nor best fit is clearly better than the other in terms of storage utilization, but first fit is generally faster

4. EXPLAIN THE CONCEPT OF PAGING AND IT METHOD.

Paging is a memory-management scheme that permits the physical address space of a process to be noncontiguous. The basic method for implementing paging involves breaking physical memory into fixed-sized blocks called frames and breaking logical memory into blocks of the same size called pages. When a process is to be executed, its pages are loaded into any available memory frames from the backing store. The backing store is divided into fixed-sized blocks that are of the same size as the memory frames. The hardware support for paging is illustrated in Figure.

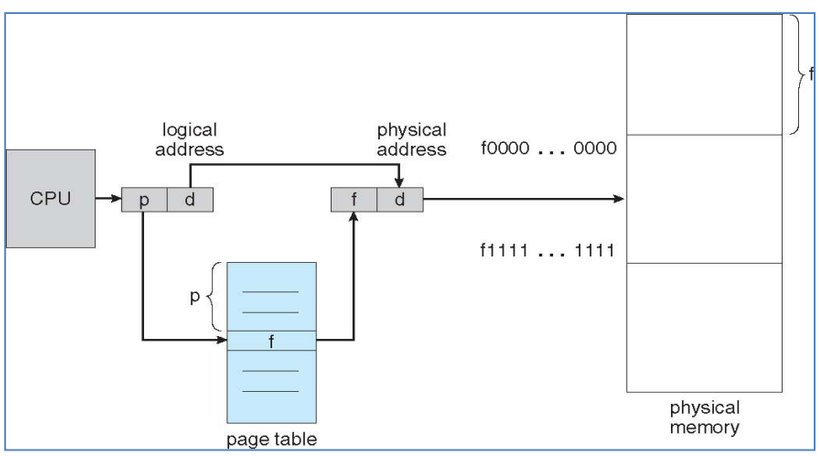

Every address generated by the CPU is divided into two parts: a page number (p) and a page offset (d). The page number is used as an index into a page table. The page table contains the base address of each page in physical memory. This base address is combined with the page offset to define the physical memory address that is sent to the memory unit. The paging model of memory is shown in Figure. The page size (like the frame size) is defined by the hardware. The size of a page is typically a power of 2, varying between 512 bytes and 16 MB per page, depending on the computer architecture. The selection of a power of 2 as a page size makes the translation of a logical address into a page number and page offset particularly easy. The logical address is as follows:

page number	page offset
p	d
$m - n$	n

where p is an index into the page table and d is the displacement within the page.

When a process arrives in the system to be executed, its size, expressed in pages, is examined. Each page of the process needs one frame. Thus, if the process requires n pages, at least n frames must be available in memory. If n frames are available, they are allocated to this arriving process. The first page of the process is loaded into one of the allocated frames, and the frame number is put in. the page table for this process. The next page is loaded into another frame, and its frame number is put into the page table, and so on

- Address generated by CPU is divided into:
    - **Page number (*p*)** – used as an index into a **page table** which contains base address of each page in physical memory
    - **Page offset (*d*)** – combined with base address to define the physical memory address that is sent to the memory unit

Government Polytechnic College, Jodhpur
Department of Computer Science (NBA Accredited)

Programme: Diploma **Class Test**: II **Term**: 2017-18
Course: Database Management System **Year**: IInd
Course CODE: CS-207 **Time:**12:15 to 1:15
Max.Marks :15 **Date:** 25-01-2018
Instructions to candidates: Attempt Any Three Questions
1.Mobiles,smart watches or any electronic gadgets are strictly banned.

SI#	Question	Marks	CO MAPPING
1	Explain the differences between DBMS and RDBMS.	5	CO3
2	Explain Cartesian product and natural join operation in relational algebra.	5	CO3
3	Explain Normalization and its need. Define Functional Dependencies.	5	CO4
4.	Explain 1NF and 2NF with example.	5	CO4

1. EXPLAIN THE DIFFERENCES BETWEEN DBMS AND RDBMS.

No.	DBMS	RDBMS
1	DBMS applications store data as file.	RDBMS applications store data in a tabular form.
2	In DBMS, data is generally stored in either a hierarchical form or a navigational form.	In RDBMS, the tables have an identifier called primary key and the data values are stored in the form of tables.
3	Normalization is not present in DBMS.	Normalization is present in RDBMS.
4	In dbms relationship between two tables or files are maintained programmatically	In Rdbms relationship between two tables or files can be specified at the time of table creation.
5	DBMS does not apply any security with regards to data manipulation.	RDBMS defines the integrity constraint for the purpose of ACID (Atomicity, Consistency, Isolation and Durability) property.
6	DBMS uses file system to store data, so there will be no relation between the tables.	in RDBMS, data values are stored in the form of tables, so a relationship between these data values will be stored in the form of a table as well.
7	DBMS has to provide some uniform methods to access the stored information.	RDBMS system supports a tabular structure of the data and a relationship between them to access the stored information.
8	DBMS does not support distributed database.	RDBMS supports distributed database.
9	DBMS is meant to be for small organization and deal with small data. it supports single user.	RDBMS is designed to handle large amount of data. it supports multiple users.
10	Dbms does not support client server architecture.	Rdbms supports client server architecture.
11	In dbms there is no security of data.	In rdbms there are multiple level of security, at logging level, at command level, at object level.
12	Dbms may satisfy less than 7 rules of Dr. e.f codd	Rdbms usually satisfy more than 7 to 8 rules of Dr. e.f codd.
13	Examples of DBMS are file systems, xml etc.	Example of RDBMS are mysql, postgre, sql server, oracle etc.

2. EXPLAIN CARTESIAN PRODUCT AND NATURAL JOIN OPERATION IN RELATIONAL ALGEBRA.

Cartesian-product

The Cartesian-product operation, denoted by a cross (×), allows us to combine information from any two relations. We write the Cartesian product of relations r1 and r2 as r1 × r2. However, since the same attribute name may appear in both r1 and r2, we need to devise a naming schema to distinguish between these

attributes. We do so here by attaching to an attribute the name of the relation from which the attribute originally came.

- Relations *r*, *s*:

A	B
α	1
β	2

r

C	D	E
α	10	a
β	10	a
β	20	b
γ	10	b

s

- *r* x *s*:

A	B	C	D	E
α	1	α	10	a
α	1	β	10	a
α	1	β	20	b
α	1	γ	10	b
β	2	α	10	a
β	2	β	10	a
β	2	β	20	b
β	2	γ	10	b

if we have relations r1(R1) and r2(R2), then r1 × r2 is a relation whose schema is the concatenation of R1 and R2. Relation R contains all tuples t for which there is a tuple t1 in r1 and a tuple t2 in r2 for which t[R1] = t1[R1] and t[R2] = t2[R2].

Natural Join

The natural join is a binary operation that allows us to combine certain selections and a Cartesian product into one operation. It is denoted by the join symbol ∗. The natural-join operation forms a Cartesian product of its two arguments, performs a selection forcing equality on those attributes that appear in both relation schemas, and finally removes duplicate attributes. We do not repeat those attributes that appear in the schemas of both relations; rather they appear only once.

- Relations r, s:

A	B	C	D
α	1	α	a
β	2	γ	a
γ	4	β	b
α	1	γ	a
δ	2	β	b

r

B	D	E
1	a	α
3	a	β
1	a	γ
2	b	δ
3	b	∈

s

- r*s

A	B	C	D	E
α	1	α	a	α
α	1	α	a	γ
α	1	γ	a	α
α	1	γ	a	γ
δ	2	β	b	δ

Notice also the order in which the attributes are listed: first the attributes common to the schemas of both relations, second those attributes unique to the schema of the first relation, and finally, those attributes unique to the schema of the second relation.

3. EXPLAIN NORMALIZATION AND ITS NEED. DEFINE FUNCTIONAL DEPENDENCIES.

Database Normalization is a technique of organizing the data in the database. Normalization is a systematic approach of decomposing tables to eliminate data redundancy (repetition) and undesirable characteristics like Insertion, Update and Deletion Anomalies. It is a multi-step process that puts data into tabular form, removing duplicated data from the relation tables.

Normalization is used for mainly two purposes,

- Eliminating redundant (useless) data.
- Ensuring data dependencies make sense i.e data is logically stored.

If a table is not properly normalized and has data redundancy then it will not only eat up extra memory space but will also make it difficult to handle and update the database, without facing data loss. Insertion, Updation

and Deletion Anamolies are very frequent if database is not normalized. To understand these anomalies let us take an example of a **Student** table.

rollno	name	branch	hod	office_tel
401	Akon	CSE	Mr. X	53337
402	Bkon	CSE	Mr. X	53337
403	Ckon	CSE	Mr. X	53337
404	Dkon	CSE	Mr. X	53337

Insertion Anomaly

Suppose for a new admission, until and unless a student opts for a branch, data of the student cannot be inserted, or else we will have to set the branch information as **NULL**.

Also, if we have to insert data of 100 students of same branch, then the branch information will be repeated for all those 100 students. These scenarios are nothing but **Insertion anomalies**.

Updation Anomaly

What if Mr. X leaves the college? or is no longer the HOD of computer science department? In that case all the student records will have to be updated, and if by mistake we miss any record, it will lead to data inconsistency. This is Updation anomaly.

Deletion Anomaly

In our **Student** table, two different information are kept together, Student information and Branch information. Hence, at the end of the academic year, if student records are deleted, we will also lose the branch information. This is Deletion anomaly.

FUNCTIONAL DEPENDENCY

Functional dependency is a relationship that exists when one attribute uniquely determines another attribute.

If R is a relation with attributes X and Y, a functional dependency between the attributes is represented as X->Y, which specifies Y is functionally dependent on X. Here X is a determinant set and Y is a dependent attribute. Each value of X is associated precisely with one Y value.

Functional dependency in a database serves as a constraint between two sets of attributes. Defining functional dependency is an important part of relational database design and contributes to aspect normalization.

4. EXPLAIN 1NF AND 2NF WITH EXAMPLE.

First Normal Form (1NF)

For a table to be in the First Normal Form, it should follow the following 4 rules:

1. It should only have single(atomic) valued attributes/columns.
2. Values stored in a column should be of the same domain
3. All the columns in a table should have unique names.
4. And the order in which data is stored, does not matter.
5. Suppose a company wants to store the names and contact details of its employees. It creates a table that looks like this:

emp_id	emp_name	emp_address	emp_mobile
101	Herschel	New Delhi	8912312390
102	Jon	Kanpur	8812121212 9900012222
103	Ron	Chennai	7778881212
104	Lester	Bangalore	9990000123 8123450987

6. Two employees (Jon & Lester) are having two mobile numbers so the company stored them in the same field as you can see in the table above.
7. This table is **not in 1NF** as the rule says "each attribute of a table must have atomic (single) values", the emp_mobile values for employees Jon & Lester violates that rule.
8. To make the table complies with 1NF we should have the data like this:

emp_id	emp_name	emp_address	emp_mobile
101	Herschel	New Delhi	8912312390
102	Jon	Kanpur	8812121212
102	Jon	Kanpur	9900012222
103	Ron	Chennai	7778881212
104	Lester	Bangalore	9990000123
104	Lester	Bangalore	8123450987

Second Normal Form (2NF)

For a table to be in the Second Normal Form,

1. It should be in the First Normal form.
2. And, it should not have Partial Dependency.

Suppose a school wants to store the data of teachers and the subjects they teach. They create a table that looks like this: Since a teacher can teach more than one subjects, the table can have multiple rows for a same teacher.

teacher_id	subject	teacher_age
111	Maths	38
111	Physics	38
222	Biology	38
333	Physics	40
333	Chemistry	40

Candidate Keys: {teacher_id, subject}

Non prime attribute: teacher_age

The table is in 1 NF because each attribute has atomic values. However, it is not in 2NF because non prime attribute teacher_age is dependent on teacher_id alone which is a proper subset of candidate key. This violates the rule for 2NF as the rule says "**no** non-prime attribute is dependent on the proper subset of any candidate key of the table".

To make the table complies with 2NF we can break it in two tables like this:

teacher_details table:

teacher_id	teacher_age
111	38
222	38
333	40

teacher_subject table:

teacher_id	subject
111	Maths
111	Physics
222	Biology
333	Physics
333	Chemistry

Q.1 What is java script? Explain its advantage & characteristics.

Ans.

- JavaScript is Client Side Scripting language.
- JavaScript first known as **live script,** but Netscape changed its name to java script.
- It is light weight and most commonly used as part of web pages, whose implement is allow client side script to interact with the user and make dynamic pages.
- It is an interpreted programming language with object oriented capabilities.
- Designed for creating network-centric applications.
- Complementary to and integrated with java.
- Complementary to and integrated with HTML.
- Open and cross platform.

Advantage of java script

The merit of using java script are-

- ✓ **Less server interaction-** We can validate user input before sending the page off to the server. This saves server to traffic, which means less load on web server.
- ✓ **Immediate feedback to the visitors-** they don't wait for a page reload to see if they have forgotten to enter something.
- ✓ **Increase interactivity**-we can interfaces that react when the user hovers over them with a mouse or activate them via the key board.
- ✓ **Richer interfaces-** We can use JavaScript to include such items as drag -and-drop components and sliders to give a Rich interface to wer site visitors.

Characteristic of JavaScript

- Client-side validation
- Dynamic drop-down menus
- Displaying data and time
- Validate user input in an HTML form before sending the data to a server.
- Build forms that respond to user input without accessing a server.
- Change the appearance of HTML documents and dynamically write HTML into separate Windows.
- Open and close new windows or frames.
- Manipulate HTML "layers" including hiding, moving, and allowing the user to drag them around a browser window.
- Build small but complete client side programs .

- Displaying popup windows and dialog boxes (like alert dialog box, confirm dialog box and prompt dialog box)
- Displaying clocks etc.

Q. 2 Explain Dialog Boxes in Java Script With Suitable Example.

Ans. JavaScript supports three important types of dialog boxes. These dialog boxes can be used to raise and alert, or to get confirmation on any input or to have a kind of input from the users.

Alert Dialog Box

- An alert dialog box is mostly used to give a warning message to the users.
- For example, if one input field requires to enter some text but the user does not provide any input, then as a part of validation, we can use an alert box to give a warning message.
- Nonetheless, an alert box can still be used for friendlier messages. Alert box gives only one button "OK" to select and proceed.

Example

```
<html>
   <head>
      <script type="text/javascript">
            function Warn() {
               alert ("This is a warning message!");
               document.write ("This is a warning message!");
            }
      </script>

   </head>
   <body>
      <p>Click the following button to see the result: </p>
```

```
      <form>
         <input type="button" value="Click Me" onclick="Warn();" />
      </form>
   </body>
</html>
```

Confirmation Dialog Box

- A confirmation dialog box is mostly used to take user's consent on any option. It displays a dialog box with two buttons: **Cancel**.
- If the user clicks on the OK button, the window method **confirm()** will return true.
- If the user clicks on the Cancel button, then **confirm()** returns false. We can use a confirmation dialog box as follows.

Example

```
<html>
   <head>
      <script type="text/javascript">
            function getConfirmation(){
               var retVal = confirm("Do we want to continue ?");
               if( retVal == true ){
                  document.write ("User wants to continue!");
                  return true;
               }
               else{
                  document.write ("User does not want to
continue!");
                  return false;
               }
            }
```

```
      </script>
   </head>
   <body>
      <p>Click the following button to see the result: </p>
      <form>
         <input type="button" value="Click Me"
onclick="getConfirmation();" />
      </form>


   </body>
</html>
```

Prompt Dialog Box

- The prompt dialog box is very useful when we want to pop-up a text box to get user input. Thus, it enables we to interact with the user.
- The user needs to fill in the field and then click OK.
- This dialog box is displayed using a method called **prompt()** which takes two parameters:
  - a label which we want to display in the text box and
  - a default string to display in the text box.
- This dialog box has two buttons: **OK** and **Cancel**.
- If the user clicks the OK button, the window method **prompt()** will return the entered value from the text box.
- If the user clicks the Cancel button, the window method **prompt()**returns **null**.

Example

The following example shows how to use a prompt dialog box –

```
<html>
  <head>
```

```
    <script type="text/javascript">
          function getValue(){
                var retVal = prompt("Enter wer name : ", "wer name
                                        here");
                document.write("We have entered : " + retVal);
             }
       </script>
    </head>
    <body>
       <p>Click the following button to see the result: </p>
       <form>
       <input type="button" value="Click Me" onclick="getValue();" />
       </form>
    </body>
</html>
```

Que. 3 What is CSS? Explain different types with suitable example.

Ans.

- **C**ascading **S**tyle **S**heets, is referred to as CSS, is a simple design language intended to simplify the process of making web pages presentable.
- CSS handles the look and feel part of a web page.
- Using CSS, we can control the color of the text, the style of fonts, the spacing between paragraphs, how columns are sized and laid out, what background images or colors are used, designs variations in display for different devices and screen sizes as well as a variety of other effects.
- CSS is easy to learn and understand but it provides powerful control over the presentation of an HTML document.
- Most commonly, CSS is combined with the markup languages HTML or XHTML.

Advantages of CSS

- ✓ CSS saves time – We can write CSS once and then reuse same sheet in multiple HTML pages. We can define a style for each HTML element and apply it to as many Web pages as we want.
- ✓ Pages load faster – If we are using CSS, we do not need to write HTML tag attributes every time. Just write one CSS rule of a tag and apply it to all the occurrences of that tag. So less code means faster download times.
- ✓ Easy maintenance – To make a global change, simply change the style, and all elements in all the web pages will be updated automatically.
- ✓ Superior styles to HTML – CSS has a much wider array of attributes than HTML, so we can give a far better look to wer HTML page in comparison to HTML attributes.
- ✓ Multiple Device Compatibility – Style sheets allow content to be optimized for more than one type of device. By using the same HTML document, different versions of a website can be presented for handheld devices such as PDAs and cell phones or for printing.
- ✓ Global web standards – Now HTML attributes are being deprecated and it is being recommended to use CSS. So its a good idea to start using CSS in all the HTML pages to make them compatible to future browsers.
- ✓ Offline Browsing – CSS can store web applications locally with the help of an offline cache. Using of this, we can view offline websites .The cache also ensures faster loading and better overall performance of the website.
- ✓ Platform Independence – The Script offer consistent platform independence and can support latest browsers as well.

There are three types of css:

1. Inline CSS
2. Internal CSS
3. External CSS

- ✓ **Inline CSS-**

- ➢ Inline styles are placed right where we need them, next to the text or graphic we wish to decorate.
- ➢ We can insert inline styles anywhere in the middle of wer HTML code, giving we real freedom to specify each web page element.
- ➢ On the other hand, this can make maintaining web pages a real chore!

Example

```
<htmltag style="cssproperty1:value; cssproperty2:value;"> </htmltag>
```

```
<h2 style="color:red;margin-left:40px;">Inline CSS is applied on this heading.</h2>
<p>This paragraph is not affected.</p>
```

- ✓ **Internal CSS-**
  - Internal styles are placed at the top of each web page document, before any of the content is listed.
  - This is the next best thing to external, because they're easy to find, yet allow we to 'override' an external style sheet -- for that special page that wants to be a nonconformist!

    Example

```
<head> <br />
 <style type="text/css">

  h1 {color:blue;}

  h2 {color:red;}

  p {color:green;}

  </style><br />

</head>
```

- ✓ **External CSS-**
  - External style sheets are separate files full of CSS instructions (with the file extension .CSS).
  - When any web page includes an external style sheet, its look and feel will be controlled by this CSS file (unless we decide to override a style using one of these next two types).
  - This is how we change a whole website at once.

    Example

```
<head>
    <link rel="stylesheet" type="text/css" href="mystyle.css">
    </head>
body {
   background-color: lightblue;
  }
    h1 {
```

```
  color: navy;
  margin-left: 20px;
}
```

Que.4 What Do we mean by DHTML? Explain.

Ans.

- Dynamic Hypertext Markup Language (DHTML) is a combination of Web development technologies (HTML+CSS+JAVA SCRIPT) used to create dynamically changing websites.
- Web pages may include animation, dynamic menus and text effects.
- The technologies used include a combination of HTML, JavaScript or VB Script, CSS and the document object model (DOM).

Designed to enhance a Web user's experience, DHTML includes the following features:

- Dynamic content, which allows the user to dynamically change Web page content
- Dynamic positioning of Web page elements
- Dynamic style, which allows the user to change the Web page's color, font, size or content.

While DHTML enhances the website user's experience, the technology may also be frustrating for users when it is used incorrectly. For example, a website menu with flashy DHTML animations can easily confuse user navigation. Another DHTML issue occurs when Web developers attempt to create cross-browser DHTML, which is very difficult.

For Web developers, DHTML poses the following Problems:

- It can be difficult to develop and debug because of lack of Web browser and technological support.
- DHTML scripts may not work correctly in various Web browsers.
- The Web page lawet may not display correctly when it is developed to display in different screen size combinations and in different browsers.

Government Polytechnic College, Jodhpur
Department of Computer Science(NBA Accredited)

Programme:Diploma **Class Test**: II **Term**: 2017
Course: PC Maintenance & Trouble Shooting **Year**: IInd
Course CODE: CS-210 **Time:**01:30 to 2:30
Max.Marks :15 **Date:**27-01-2018
Instructions to candidates: Attempt all Questions
Note - Mobiles,smart watches or any electronic gadgets are strictly banned.

SI#	Question	Marks	CO (MAPPING)
1	Explain the working of Optical Character Reader	5	CO3
2	Explain the working of Inkjet Printer with the help of diagram	5	CO3
3	Explain the LCD (Liquid Cristal Display)	5	CO3

Ans.1 OCR

OCR, in full optical character recognition, Scanning and comparison technique intended to identify printed text or numerical data. It avoids the need to retype already printed material for data entry. OCR software attempts to identify characters by comparing shapes to those stored in the software library. The software tries to identify words using character proximity and will try to reconstruct the original page layout. High accuracy can be obtained by using sharp, clear scans of high-quality originals, but it decreases as the quality of the original declines. And It used by banks to convert the scanned device image of a typed or printed page into text that can be edited on the computer.

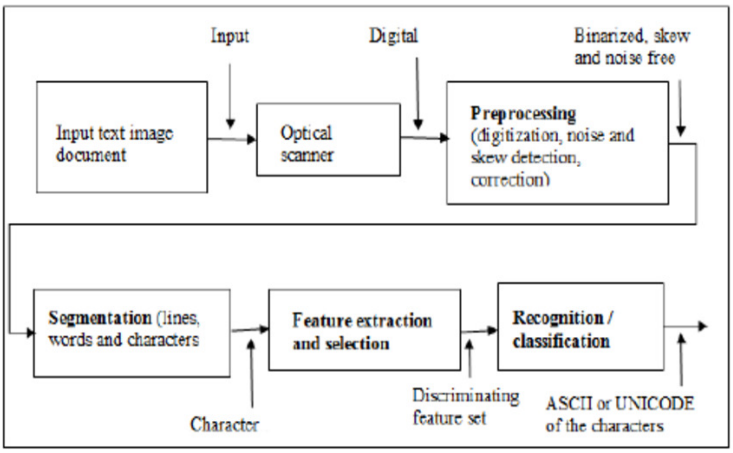

Ans2. Ink Jet Printer

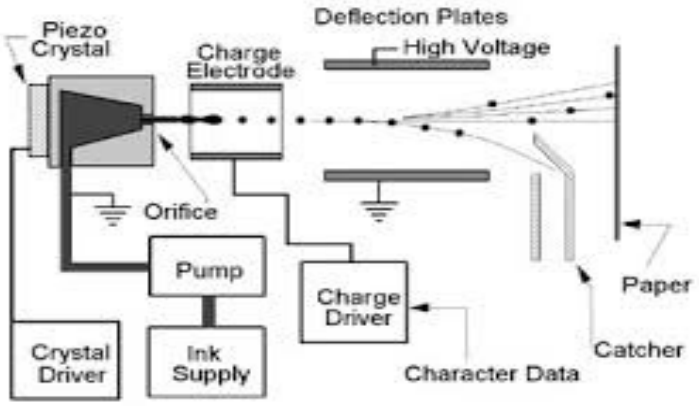

The most popular printer for home computer users that prints by spraying streams of quick-drying ink on paper. The ink is stored in disposable ink cartridges, often a separate cartridge is used for each of the major colors. These colors are usually Black, Red/Magenta, Green/Cyan, and Yellow (CMYK). The picture is an example of a computer inkjet printer.
Although inkjet printers themselves are often relatively inexpensive, the ink cartridges used in the printers can increase the overall cost of the printer.

Ans. 3. Liquid Crystal Display (LCD)
LCD Monitors
LCD, Liquid Crystal Display or also known as Liquid Crystal Diode is one of the most popular display technologies currently. LCD monitors are lightweight, compact, occupy less space, consume low power and are available in a reasonable price. Currently there are two types of LCD technology in use – Active matrix LCD technology or TFT and Passive matrix technology.
There is a display controller in the monitor which receives the display signals from the video adaptor in the motherboard. The display controller controls two things – the electric signals to the liquid crystals and the back light. Structure of an LCD is shown in the below images.

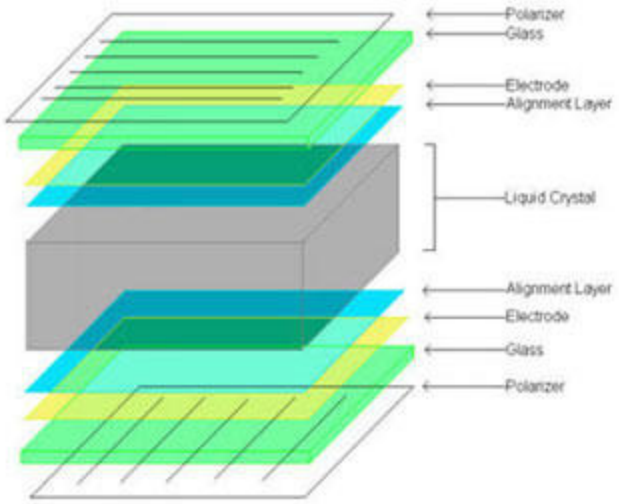

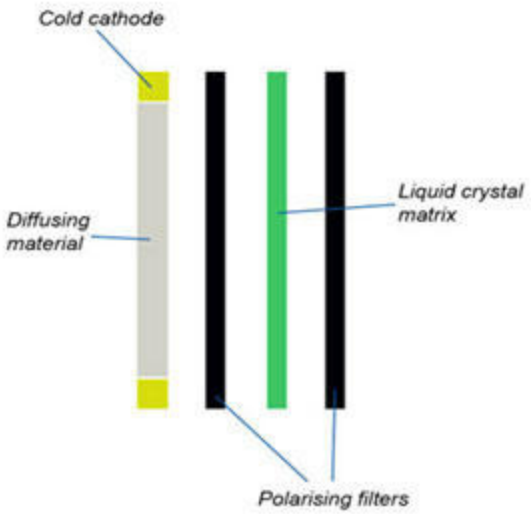

The liquid crystals used in the LCD are Twisted Nemantic (TN), a type of liquid crystals that are twisted at 90o with the surface. In this state, crystals allow the light to pass through the polarizer but on applying a voltage, they get untwisted and block the light to passing through the polarizer. The display controller starts the backlight that passes through the first piece of the glass. At the same time the display controller also send the electrical currents to the liquid crystal molecules to align and allowing the varying level of light to pass through the second piece of glass, forming the desired picture on the screen. In color monitors, each pixel is made of three liquid crystal cells fronted with red, green and blue filters. The light passing through the filtered screen forms the color what you see on the monitor. A wide range of colors are formed by varying the intensity of colored pixels.

The backlight is made of cathodes. The resolution of a monitor is simply the number of pixels contained in the matrix. Typically a 17 inch monitor has a resolution of 1280 x 1024 pixels.